BOBRICK

Technical Data

DOUBLE-ROLL TOILET TISSUE DISPENSER

B-686 B-6867

Specify Model Required: ☐ Model B-686 Bright polished stainless steel
☐ Model B-6867 Satin-finish stainless steel

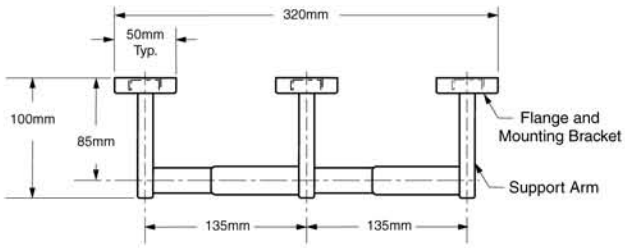

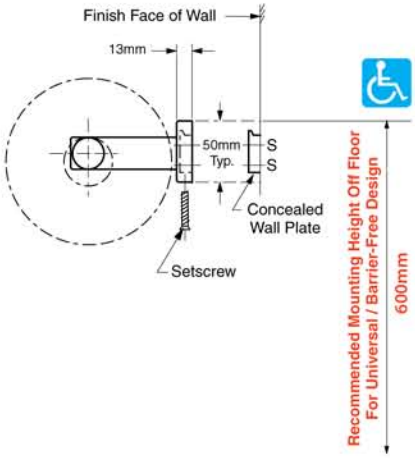

MATERIAL:

Flanges and Support Arms (3) — 18-8 S, type-304, 22-gauge (0.8mm) stainless steel. Concealed, 16-gauge (1.6mm) stainless steel mounting bracket is welded inside each flange. Secured to wall plate with setscrew.

Concealed Wall Plates (3) — 18-8 S, type-304, 16-gauge (1.6mm) stainless steel.

Spindles (2) — Chrome-plated plastic. Equipped with heavy-duty internal springs.

Designer's Note: Theft-resistant spindles, which are removable only with special key provided, are available as optional accessories. To specify, add suffix *.60* to model number. Example B-686.60.

INSTALLATION:

To remove concealed wall plates from back of flanges and mounting brackets, loosen setscrews. Mount each wall plate with prongs at top; secure with sheet-metal screws furnished by manufacturer at points indicated by an *S*. Engage mounting brackets onto prongs of wall plate, then secure into position by tightening setscrews at bottom of flanges.

Note: Center-to-center of concealed wall plates must be within 1/16" (1.6mm) of dimension shown.

For partitions with particle-board or other solid core: Secure with sheet-metal screws furnished by manufacturer or provide through-bolts, nuts, and washers.

For hollow-core metal partitions: Provide solid backing into which the furnished sheet-metal screws can be secured. If two units are installed back-to-back, then provide threaded sleeves and machine screws for the full thickness of partition.

For masonry walls: Provide fiber plugs or expansion shields for use with sheet-metal screws furnished by manufacturer, or provide 1/8" (3mm) toggle bolts or expansion bolts.

For plaster or dry wall construction: Provide concealed backing to comply with local building codes, then secure the unit with sheet-metal screws furnished.

SPECIFICATION:

Double-roll toilet tissue dispenser shall be type-304 stainless steel with _____ (insert one: bright polished or satin) finish. Unit shall accommodate two standard-core toilet paper rolls up to 5-1/2" (140mm) diameter (1800 sheets). Flanges shall be equipped with concealed, 16-gauge (1.6mm) stainless steel mounting brackets that are secured to concealed stainless steel wall plates with stainless steel setscrews. *Spindles shall be equipped with a heavy-duty internal spring. Manufacturer's service and parts manual shall be provided to the building owner/manager upon request.

**To specify theft-resistant spindles as an optional accessory, add to specification:* Theft-resistant spindles shall be removable only with special key provided.

RYNAT industries

RYNAT INDUSTRIES AUSTRALIA PTY LTD | www.rynat.com | Email: sales@rynat.com |

| Aust Wide: 1300 558 518 | Tel: +61 8 6254 6555 | 20 Murray Rd South Welshpool WA |

The illustrations and descriptions herein are applicable to production as of the date of this Technical Data Sheet.
The manufacturer reserves the right to, and does from time to time, make changes and improvements in designs and dimensions.

Revised 6/06 Printed in U.S.A.

© 2006 by Bobrick Washroom Equipment, Inc.