KOALA KARE PRODUCTS
KB200 HORIZONTAL WALL MOUNTED BABY CHANGING STATION

KB200-00 CREAM
KB200-01 GREY
KB200-05 WHITE GRANITE
KB200-11 EARTH

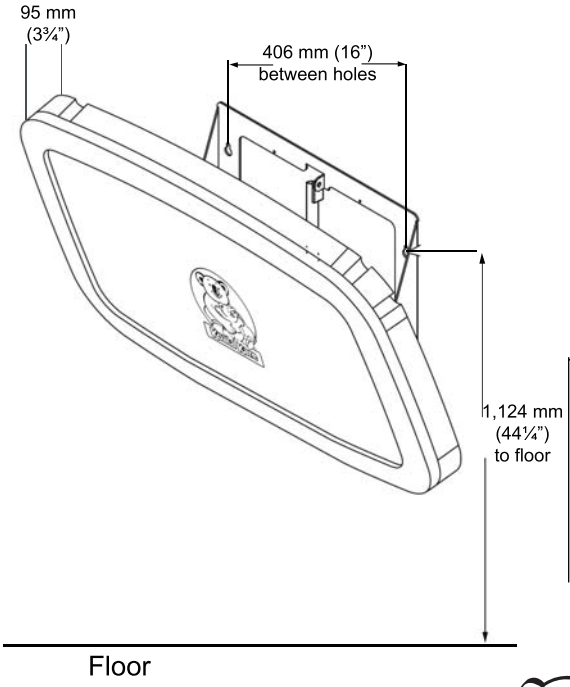

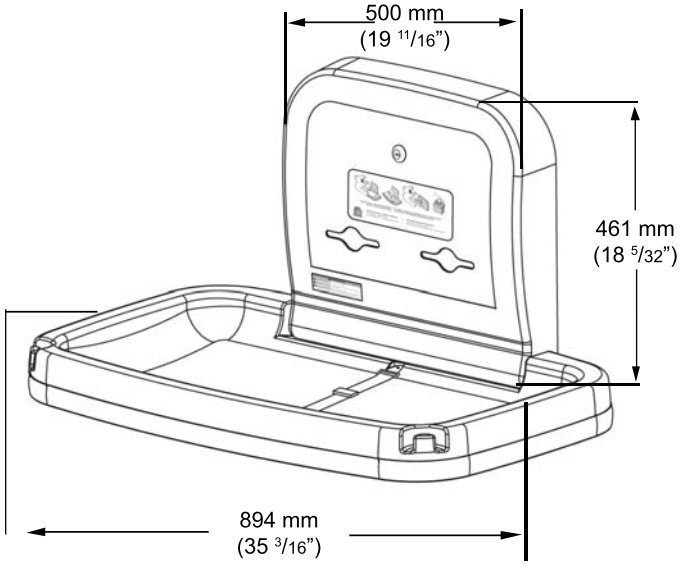

Koala Kare
We Care for Kids.

KB200 TECHNICAL DATA SHEET

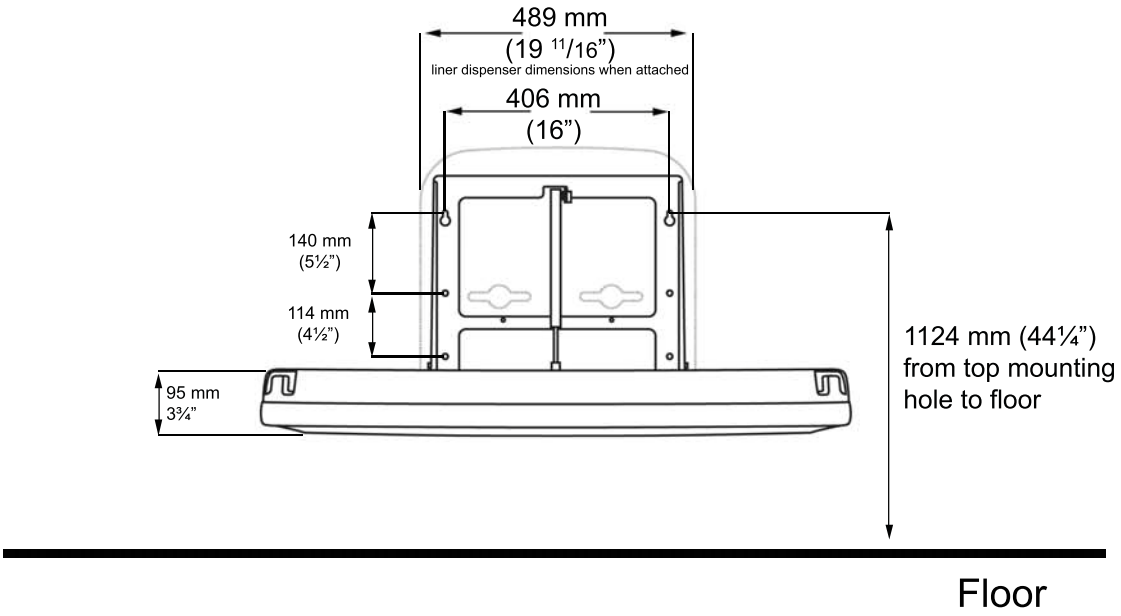
489 mm
(19 11/16")
liner dispenser dimensions when attached
406 mm
(16")
140 mm
(5½")
114 mm
(4½")
95 mm
3¾"
1124 mm (44¼")
from top mounting
hole to floor
Floor

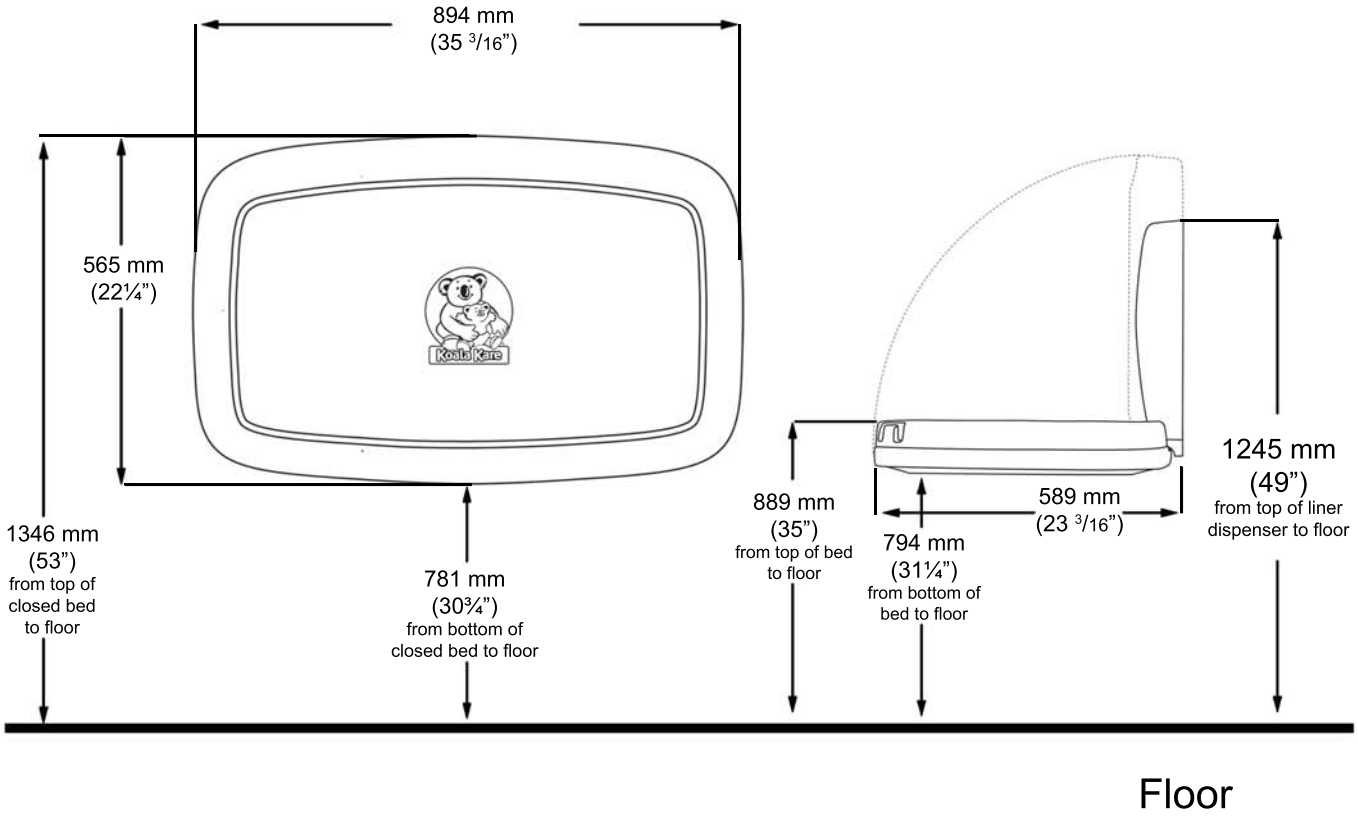
894 mm
(35 3/16")
565 mm
(22¼")
Koala Kare
1346 mm
(53")
from top of
closed bed
to floor
781 mm
(30¾")
from bottom of
closed bed to floor
889 mm
(35")
from top of bed
to floor
794 mm
(31¼")
from bottom of
bed to floor
589 mm
(23 3/16")
1245 mm
(49")
from top of liner
dispenser to floor
Floor

MATERIALS:

Injection-moulded polypropylene with Microban® antibacterial protection built into the bed surface. Reinforced steel-on-steel hinge mechanism and metal mounting chassis with mounting hardware included. Labelled usage instructions and safety messages in four languages. Optional Braille label available. Contoured changing surface area is 11,430 mm^2 (450 sq. in) and comes complete with nylon safety strap and bag hooks. Dual cavity liner dispenser holds approximately 50 KB150-99 bed liners.

OPERATION:

Concealed pneumatic cylinder and metal mounting chassis provides controlled, slow opening and closing of bed. Polypropylene is easy to clean and resists odours and bacterial growth. Complies with ASTM static load performance requirements when properly installed.

Warning: To ensure that the unit supports the intended loads, baby changing stations must be properly installed according to the manufacturer's instructions.

SPECIFICATION:

Baby changing station body shall be durable, injection-moulded polypropylene. Design of unit shall be surface-mounted. Unit shall be equipped with a pneumatic cylinder for controlled opening and closing of bed. Bed shall be secured to metal mounting chassis with a concealed steel-on-steel hinge. No hinge structure shall be exposed on interior or exterior surfaces. Unit shall have mounting hardware included. Unit shall have Microban® antibacterial built into the changing surface. Unit shall conform to ANSI S117.1 Accessible and Usable Building and Facilities, ASTM F 2285-04 Standard Safety Performance Specification for Diaper Changing Tables for Commercial Use, ANSI Z535.4 Product Safety Signs and Labels, EN 12221:2008, ASTM G22 Antibacterial standards or local code if more stringent installation requirements are applicable for accessible design. Unit shall comply with accessibility design guidance (including ADAAG in the U.S.A.) when properly installed. Bed shall have smooth concave changing area with a nylon safety strap and two hooks for bags.

Unit shall have a built-in Liner Dispenser for use with 3-ply chemical free biodegradable bed liners, instructional graphics and safety messages in 4 languages. Optional Braille label is available. Unit shall be backed by manufacturer's 5-year limited warranty on materials and workmanship and include a provision for replacement caused by vandalism. Unit shall be manufactured in the U.S.A.

INSTALLATION:

To ensure proper installation and compliance to building codes, it is recommended that a qualified trades person installs the unit. The unit must be properly installed onto a permanent wall that is capable of supporting significant weight and can accommodate the supplied installation hardware. The Koala Baby Changing Station meets accessibility design guidance (including ADAAG in the U.S.A.) when properly installed.

Drilling holes and mounting the station:

1. Remove changing station from the packaging and check for any transport damage. If damage is found, please call Koala Kare Products' Customer Service at +1 888.733.3456. Remove "Installation Kit" and "Operator Kit" from box. Please give "Operator Kit" to facility manager or operator. Box should contain two pieces: the bed and metal mounting chassis and the wall mounted liner dispenser. Identify the best location for installing the unit.

2. Standard Installation- Remove the bed and chassis from the box and select the wall area where the unit will be installed. Make sure you have taken into consideration the operating clearance of 241 mm (9½") on both sides of the exposed chassis and 589 mm (23 $^{3}/_{16}$") from wall surface when open. Measure from the floor 1124 mm (44¼") on stud centre and mark the wall. The mounting holes are designed for 405 mm (16") stud centres. Ensure the locations you have marked for the mounting holes are level before drilling. Drill pilot holes for keyhole mounting using a 3 mm (1/8") standard drill bit.

Masonry or Tiled Stud Wall- Use a 5.6 mm (7/32") masonry drill bit for the pilot hole until you hit the stud. Change bit to 3 mm (1/8") standard drill bit.

Metal Stud or Concrete Block- If the wall has wooden studs that are not on 406 mm (16") centres, has metal studs or an underlying surface of concrete block, drill with a 13 mm (½") masonry bit. (You may have to purchase toggles before installing.) You must allow a minimum of inside wall space for toggles to turn depending on toggles used. Insert and tighten toggles.

3. Screw two of the mounting screws into the pilot holes leaving 6 mm (¼") exposed to allow keyhole slots to be easily mounted over the screw heads. Place chassis over screws. After securing the unit using the keyhole slots, verify that the unit is level. Tighten top two screws so that they are flush with the wall. Use the four lower holes as a guide to mark and drill pilot holes. Use remaining four screws and four washers to complete installation of bed and metal mounting bracket. Insert washers over lower four screws. All SIX screws and four washers must be mounted to the chassis.

4. Ensure liner dispenser is free from damage. Remove key, unlock, and open liner dispenser lid. This will expose liner dispenser mounting holes. Line up dispenser mounting holes onto chassis and secure with the four screws provided. Close and lock the liner dispenser door.

5.Clean work area and inspect unit to ensure it opens and closes smoothly. Give Operator Kit and key to the building operator. Replacement parts and additional liners can be purchased from your local distributor or by calling Koala at +1 888.733.3456 or +1 303.539.8300.

These illustrations and descriptions herein are applicable to production as of the date of this Technical Data Sheet. The manufacturer reserves the right to, and does from time to time, make changes and improvements in designs and dimensions without notice.

Koala Kare
We Care for Kids.